CAD FILE:

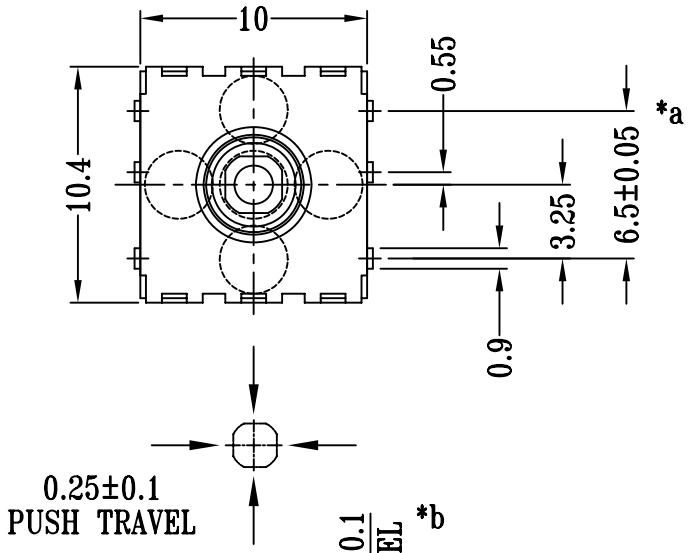

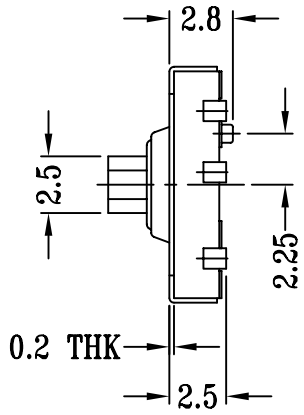

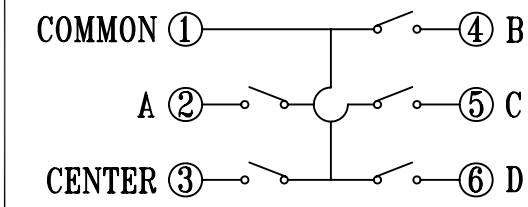

SCHEMATIC

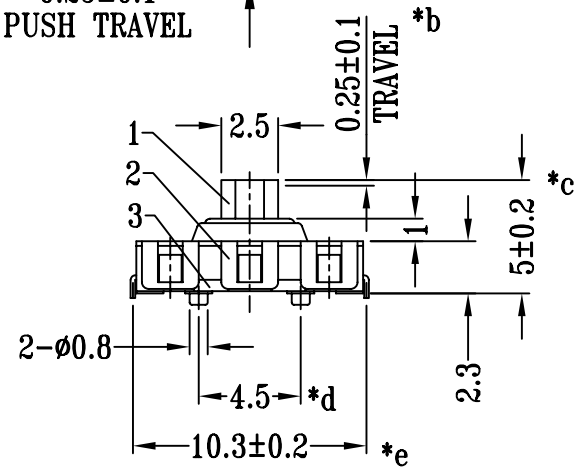

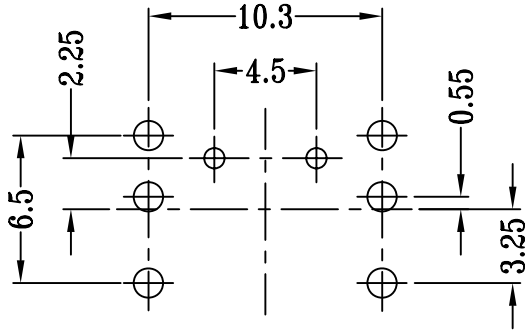

P.C.B LAYOUT

OPERATING FORCE:
CENTRAL:350±150gf
LOCAL:350±150gf

注:带"*"表示关键尺寸(5个)

NO.	PARTS	MATERIALS	Q'TY	FINISH
8				
7				
6	ADHESIVE TAPE	PET	1	YELLOW
5	HOUSING	NYLON+F.G	1	BLACK
4	CONTACT	SUS	6	Ag CLAD
3	CASE	NYLON+F.G+94V0/BRASS STRIP	1	BLACK/Ag PLATED OVER Ni PLATED
2	COVER	SUS	1	WASHING
1	KNOB	NYLON+N.G	1	BLACK

TOLERANCE UNLESS SPECIFIED
WITHIN: 1.5±0.1mm
OVER : 1.5±0.2mm

SHENZHEN XIEJIA ELECTRONICS CO.,LTD.

ISSUE	DATE	DESCRIPTIONS OF REVISION	APPD.

TITLE : MULTI FUNVTION SWITCH
UNIT : mm
DRWG NO.: XJ-DR-MT003A-00
MODEL: MT-003A
SCALE: 3 : 1

DWN.	ZHOUYU	2005-3-26
CHK'D	FANGYING	2005-3-26
APPD.	KANGXINAN	2005-3-26

ALL MATERIALS MUST BE COMPLIANT TO ROHS